ADVANCED ENCRYPTION STANDARD (AES)

Overview

- Introduction
- Rijndael – the AES cipher
- AES encryption
- Steps in each round
- Key expansion
- AES decryption
- Implementation aspects
- Summary

Introduction

- a replacement for DES was needed
  - have theoretical attacks that can break it
  - have demonstrated exhaustive key search attacks
- can use Triple-DES – but slow, has small blocks
- US NIST issued call for ciphers in 1997
- 15 candidates accepted in Jun 98
- 5 were shortlisted in Aug-99
- Rijndael was selected as the AES in Oct-2000
- issued as FIPS PUB 197 standard in Nov-2001

The AES Cipher - Rijndael

- designed by Rijmen-Daemen in Belgium
- has 128/192/256 bit keys, 128 bit data
- an **iterative** rather than **Feistel** cipher
  - processes data as block of 4 columns of 4 bytes
  - operates on entire data block in every round
- designed to have:
  - resistance against known attacks
  - speed and code compactness on many CPUs
  - design simplicity

AES Encryption Process

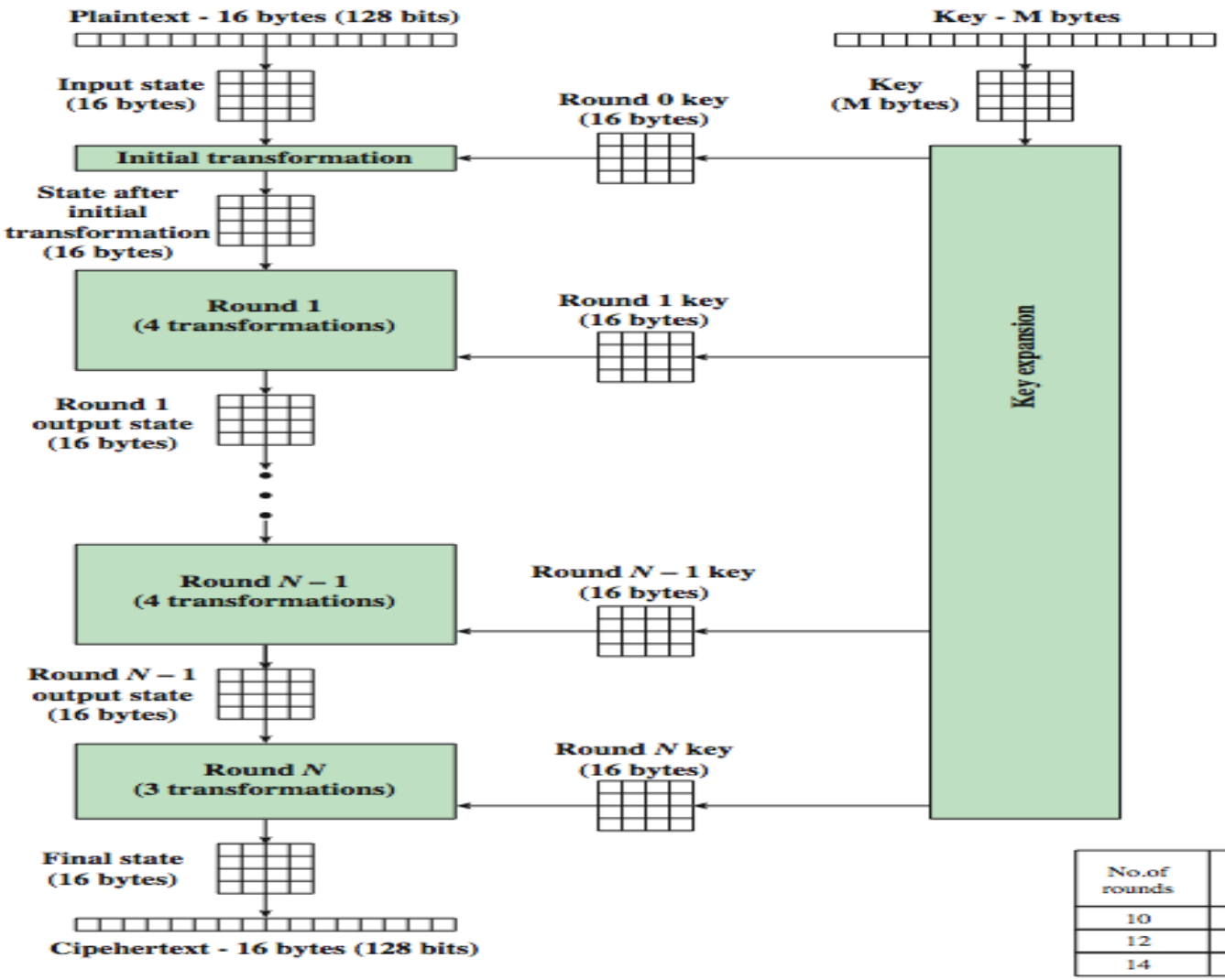

No.of rounds	Key Length (bytes)
10	16
12	24
14	32

AES Structure

- data block of 4 columns of 4 bytes is state
- key is expanded to array of words
- has 9/11/13 rounds in which state undergoes:
  - byte substitution (1 S-box used on every byte)
  - shift rows (permute bytes between groups/columns)
  - mix columns (subs using matrix multiply of groups)
  - add round key (XOR state with key material)
  - view as alternating XOR key & scramble data bytes
- initial XOR key material & incomplete last round
- with fast XOR & table lookup implementation

AES Structure … Contd.

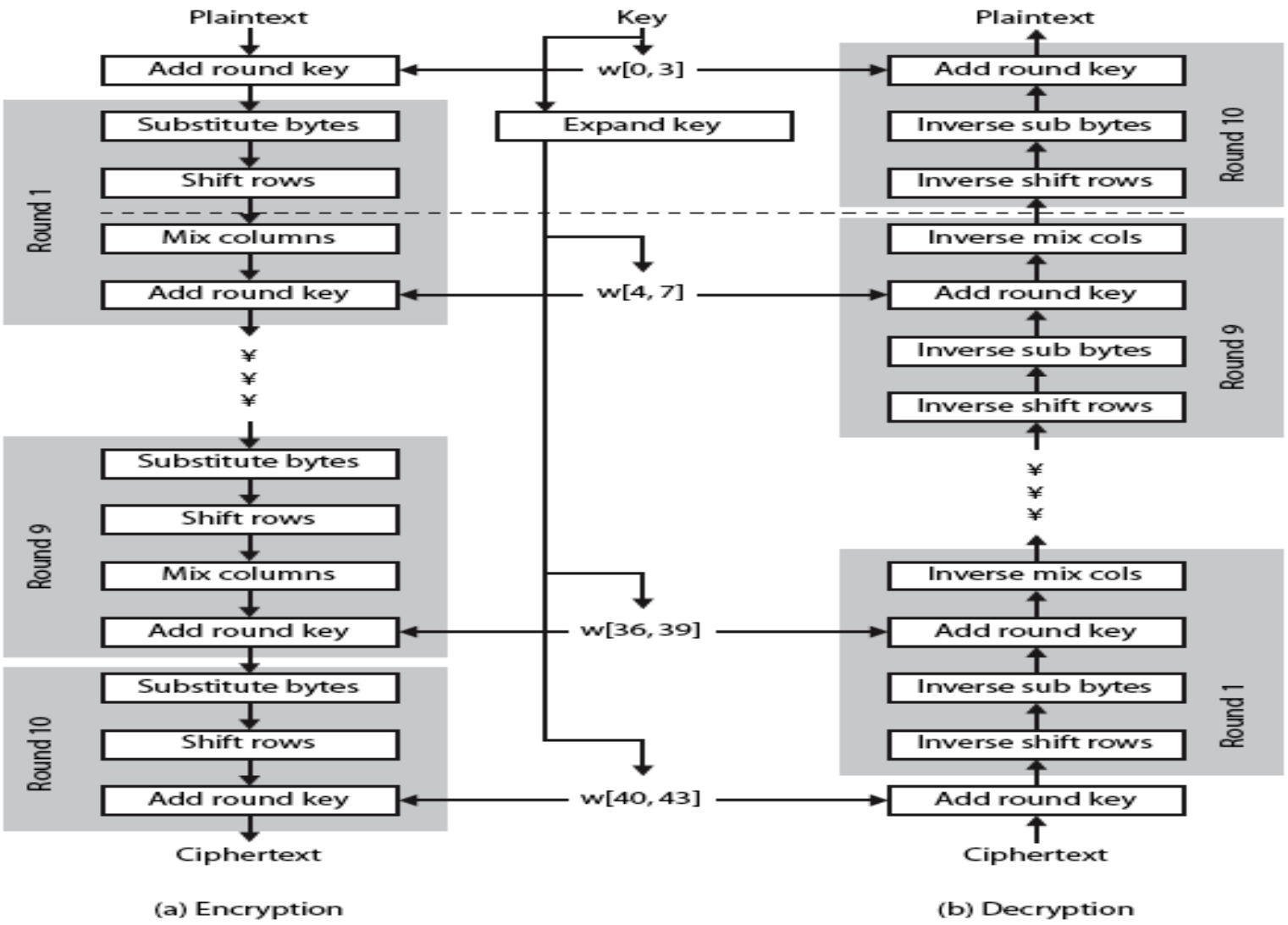

(a) Encryption (b) Decryption

Some Comments on AES

- an **iterative** rather than **Feistel** cipher
- key expanded into array of 32-bit words
  - four words form round key in each round
- 4 different stages are used as shown
- has a simple structure
- only AddRoundKey uses key
- AddRoundKey a form of Vernam cipher
- each stage is easily reversible
- decryption uses keys in reverse order
- decryption does recover plaintext
- final round has only 3 stages

Substitute Bytes

- a simple substitution of each byte
- uses one table of 16x16 bytes containing a permutation of all 256 8-bit values
- each byte of state is replaced by byte indexed by row (left 4-bits) & column (right 4-bits)
  - E.g., byte {95} is replaced by byte in row 9 column 5
  - which has value {2A}
- S-box constructed using defined transformation of values in $GF(2^8)$
- designed to be resistant to all known attacks

Substitute Bytes … Contd.

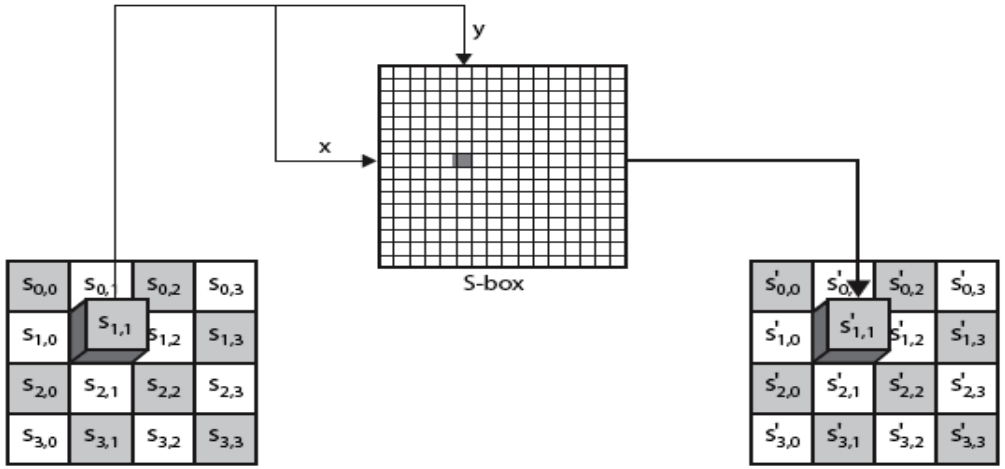

EA	04	65	85
83	45	5D	96
5C	33	98	B0
F0	2D	AD	C5

→

87	F2	4D	97
EC	6E	4C	90
4A	C3	46	E7
8C	D8	95	A6

x \ y	0	1	2	3	4	5	6	7	8	9	A	B	C	D	E	F
0	63	7C	77	7B	F2	6B	6F	C5	30	01	67	2B	FE	D7	AB	76
1	CA	82	C9	7D	FA	59	47	F0	AD	D4	A2	AF	9C	A4	72	C0
2	B7	FD	93	26	36	3F	F7	CC	34	A5	E5	F1	71	D8	31	15
3	04	C7	23	C3	18	96	05	9A	07	12	80	E2	EB	27	B2	75
4	09	83	2C	1A	1B	6E	5A	A0	52	3B	D6	B3	29	E3	2F	84
5	53	D1	00	ED	20	FC	B1	5B	6A	CB	BE	39	4A	4C	58	CF
6	D0	EF	AA	FB	43	4D	33	85	45	F9	02	7F	50	3C	9F	A8
7	51	A3	40	8F	92	9D	38	F5	BC	B6	DA	21	10	FF	F3	D2
8	CD	0C	13	EC	5F	97	44	17	C4	A7	7E	3D	64	5D	19	73
9	60	81	4F	DC	22	2A	90	88	46	EE	B8	14	DE	5E	0B	DB
A	E0	32	3A	0A	49	06	24	5C	C2	D3	AC	62	91	95	E4	79
B	E7	C8	37	6D	8D	D5	4E	A9	6C	56	F4	EA	65	7A	AE	08
C	BA	78	25	2E	1C	A6	B4	C6	E8	DD	74	1F	4B	BD	8B	8A
D	70	3E	B5	66	48	03	F6	0E	61	35	57	B9	86	C1	1D	9E
E	E1	F8	98	11	69	D9	8E	94	9B	1E	87	E9	CE	55	28	DF
F	8C	A1	89	0D	BF	E6	42	68	41	99	2D	0F	B0	54	BB	16

Example: the value {95} is mapped into the value {2A}.

Shift Rows

- a circular byte shift in each each
  - 1st row is unchanged
  - 2nd row does 1 byte circular shift to left
  - 3rd row does 2 byte circular shift to left
  - 4th row does 3 byte circular shift to left
- decrypt inverts using shifts to right
- since state is processed by columns, this step permutes bytes between the columns

Shift Rows … Contd.

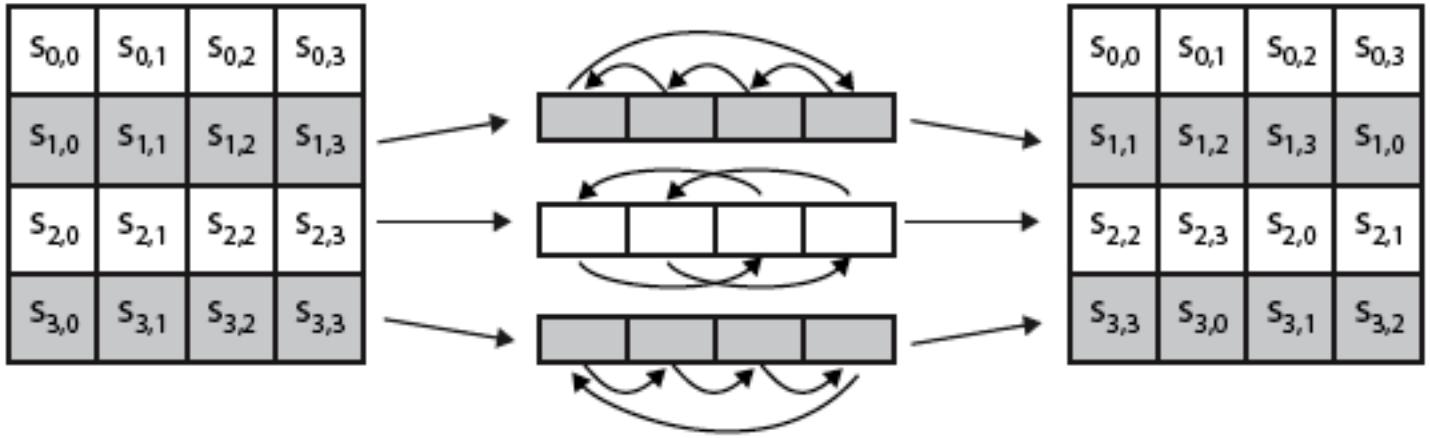

87	F2	4D	97
EC	6E	4C	90
4A	C3	46	E7
8C	D8	95	A6

→

87	F2	4D	97
6E	4C	90	EC
46	E7	4A	C3
A6	8C	D8	95

Mix Columns

- each column is processed separately
- each byte is replaced by a value dependent on all 4 bytes in the column
- effectively a matrix multiplication in GF(2^8) using prime poly $m(x) = x^8+x^4+x^3+x+1$

$$\begin{bmatrix} 02 & 03 & 01 & 01 \\ 01 & 02 & 03 & 01 \\ 01 & 01 & 02 & 03 \\ 03 & 01 & 01 & 02 \end{bmatrix} \begin{bmatrix} s_{0,0} & s_{0,1} & s_{0,2} & s_{0,3} \\ s_{1,0} & s_{1,1} & s_{1,2} & s_{1,3} \\ s_{2,0} & s_{2,1} & s_{2,2} & s_{2,3} \\ s_{3,0} & s_{3,1} & s_{3,2} & s_{3,3} \end{bmatrix} = \begin{bmatrix} s'_{0,0} & s'_{0,1} & s'_{0,2} & s'_{0,3} \\ s'_{1,0} & s'_{1,1} & s'_{1,2} & s'_{1,3} \\ s'_{2,0} & s'_{2,1} & s'_{2,2} & s'_{2,3} \\ s'_{3,0} & s'_{3,1} & s'_{3,2} & s'_{3,3} \end{bmatrix}$$

Mix Columns … Contd.

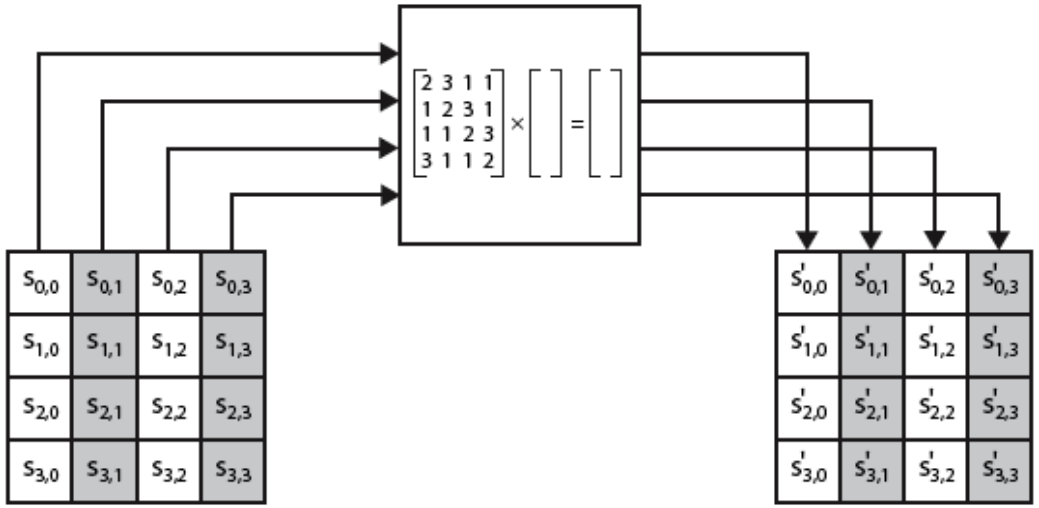

87	F2	4D	97
6E	4C	90	EC
46	E7	4A	C3
A6	8C	D8	95

→

47	40	A3	4C
37	D4	70	9F
94	E4	3A	42
ED	A5	A6	BC

$$(\{02\} \bullet \{87\}) \oplus (\{03\} \bullet \{6E\}) \oplus \{46\} \oplus \{A6\} = \{47\}$$

$$\{87\} \oplus (\{02\} \bullet \{6E\}) \oplus (\{03\} \bullet \{46\}) \oplus \{A6\} = \{37\}$$

$$\{87\} \oplus \{6E\} \oplus (\{02\} \bullet \{46\}) \oplus (\{03\} \bullet \{A6\}) = \{94\}$$

$$(\{03\} \bullet \{87\}) \oplus \{6E\} \oplus \{46\} \oplus (\{02\} \bullet \{A6\}) = \{ED\}$$

Mix Columns … Contd.

AES Arithmetic

- uses arithmetic in the finite field GF(2^8)
- with irreducible polynomial
  - $m(x) = x^8 + x^4 + x^3 + x + 1$
  - which is (100011011) or {11b}
- e.g.
  - {02} • {87} mod {11b} = (1 0000 1110) mod {11b}
  - = (1 0000 1110) xor (1 0001 1011) = (0001 0101)

Mix Columns … Contd.

- can express each col as 4 equations
  - to derive each new byte in col
- decryption requires use of inverse matrix
  - with larger coefficients, hence a little harder
- have an alternate characterization
  - each column a 4-term polynomial
  - with coefficients in $GF(2^8)$
  - and polynomials multiplied modulo (x^4+1)
- coefficients based on linear code with maximal distance between codewords

Add Round Key

- XOR state with 128-bits of the round key
- again processed by column (though effectively a series of byte operations)
- inverse for decryption identical
  - since XOR own inverse, with reversed keys
- designed to be as simple as possible
  - a form of Vernam cipher on expanded key
  - requires other stages for complexity / security

Add Round Key … Contd.

$s_{0,0}$	$s_{0,1}$	$s_{0,2}$	$s_{0,3}$
$s_{1,0}$	$s_{1,1}$	$s_{1,2}$	$s_{1,3}$
$s_{2,0}$	$s_{2,1}$	$s_{2,2}$	$s_{2,3}$
$s_{3,0}$	$s_{3,1}$	$s_{3,2}$	$s_{3,3}$

$\oplus$

w_i	w_{i+1}	w_{i+2}	w_{i+3}

$=$

$s'_{0,0}$	$s'_{0,1}$	$s'_{0,2}$	$s'_{0,3}$
$s'_{1,0}$	$s'_{1,1}$	$s'_{1,2}$	$s'_{1,3}$
$s'_{2,0}$	$s'_{2,1}$	$s'_{2,2}$	$s'_{2,3}$
$s'_{3,0}$	$s'_{3,1}$	$s'_{3,2}$	$s'_{3,3}$

AES Round

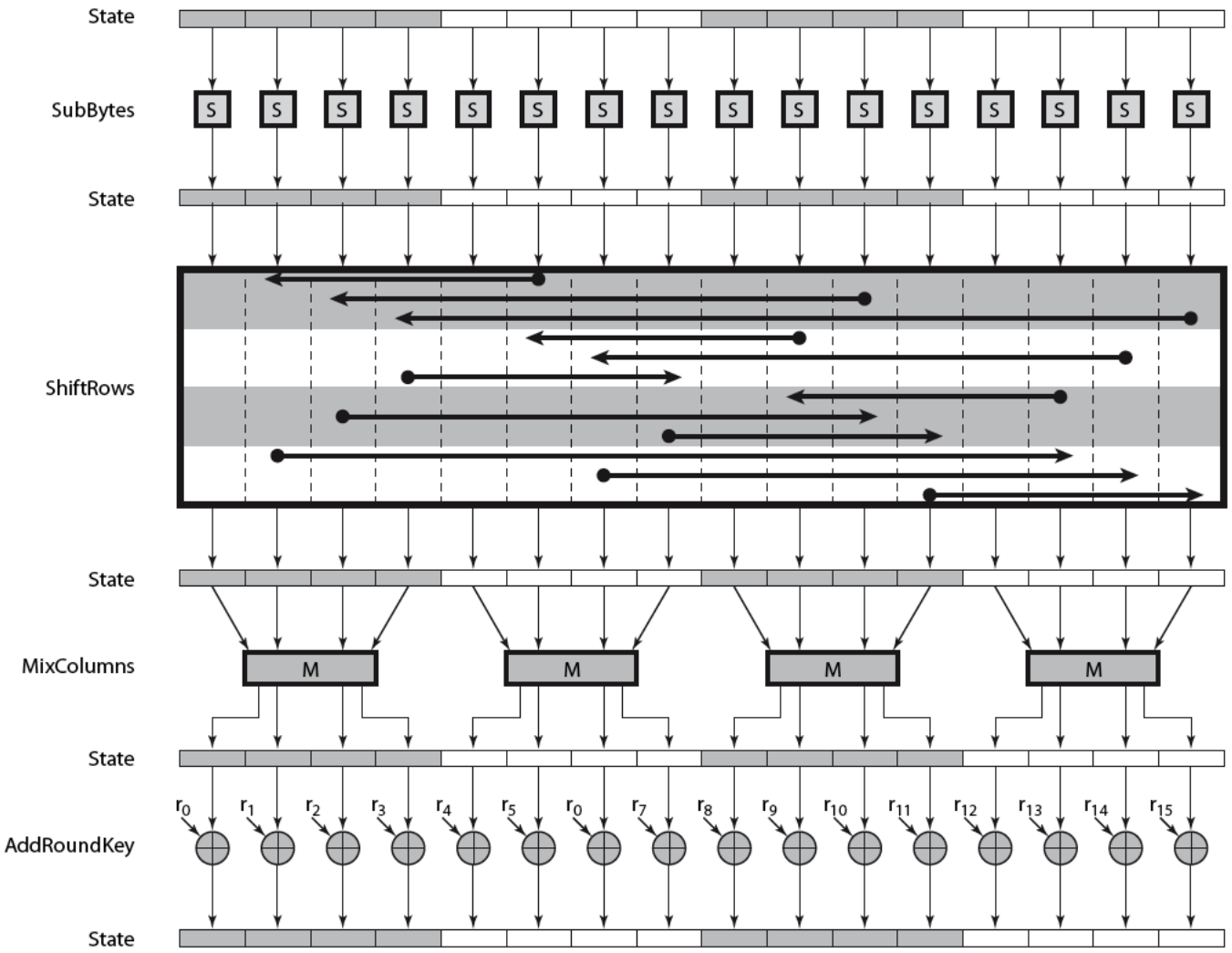
State
SubBytes
S
State
ShiftRows
State
MixColumns
M
State
AddRoundKey
r_0 r_1 r_2 r_3 r_4 r_5 r_0 r_7 r_8 r_9 r_{10} r_{11} r_{12} r_{13} r_{14} r_{15}
State

AES Key Expansion

- takes 128-bit (16-byte) key and expands into array of 44/52/60 32-bit words
- start by copying key into first 4 words
- then loop creating words that depend on values in previous & 4 places back
  - in 3 of 4 cases just XOR these together
  - 1st word in 4 has rotate + S-box + XOR round constant on previous, before XOR 4th back

AES Key Expansion … Contd.

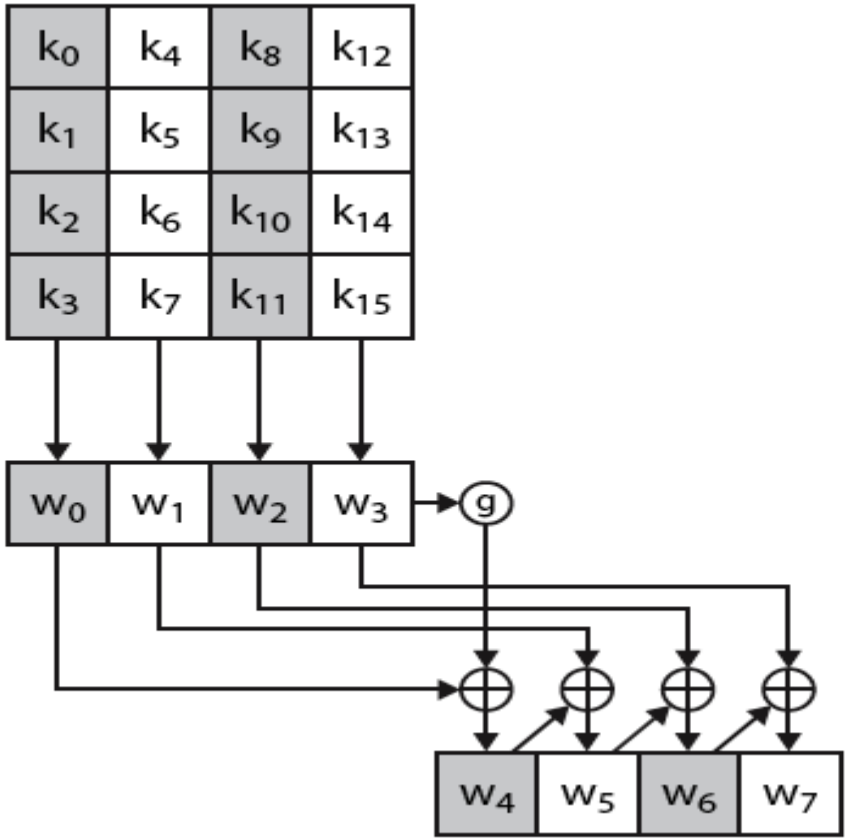

AES Key Expansion … Contd.

Rationale

- designed to resist known attacks
- design criteria included
  - knowing part key insufficient to find many more
  - invertible transformation
  - fast on wide range of CPU's
  - use round constants to break symmetry
  - diffuse key bits into round keys
  - enough non-linearity to hinder analysis
  - simplicity of description

AES Example

Key Expansion

Key Words	Auxiliary Function
w0 = 0f 15 71 c9	RotWord(w3)= 7f 67 98 af = x1
w1 = 47 d9 e8 59	SubWord(x1)= d2 85 46 79 = y1
w2 = 0c b7 ad	Rcon(1)= 01 00 00 00
w3 = af 7f 67 98	y1 ⊕ Rcon(1)= d3 85 46 79 = z1
w4 = w0 ⊕ z1 = dc 90 37 b0	RotWord(w7)= 81 15 a7 38 = x2
w5 = w4 ⊕ w1 = 9b 49 df e9	SubWord(x4)= 0c 59 5c 07 = y2
w6 = w5 ⊕ w2 = 97 fe 72 3f	Rcon(2)= 02 00 00 00
w7 = w6 ⊕ w3 = 38 81 15 a7	y2 ⊕ Rcon(2)= 0e 59 5c 07 = z2
w8 = w4 ⊕ z2 = d2 c9 6b b7	RotWord(w11)= ff d3 c6 e6 = x3
w9 = w8 ⊕ w5 = 49 80 b4 5e	SubWord(x2)= 16 66 b4 8e = y3
w10 = w9 ⊕ w6 = de 7e c6 61	Rcon(3)= 04 00 00 00
w11 = w10 ⊕ w7 = e6 ff d3 c6	y3 ⊕ Rcon(3)= 12 66 b4 8e = z3
w12 = w8 ⊕ z3 = c0 af df 39	RotWord(w15)= ae 7e c0 b1 = x4
w13 = w12 ⊕ w9 = 89 2f 6b 67	SubWord(x3)= e4 f3 ba c8 = y4
w14 = w13 ⊕ w10 = 57 51 ad 06	Rcon(4)= 08 00 00 00
w15 = w14 ⊕ w11 = b1 ae 7e c0	y4 ⊕ Rcon(4)= ec f3 ba c8 = 4
w16 = w12 ⊕ z4 = 2c 5c 65 f1	RotWord(w19)= 8c dd 50 43 = x5
w17 = w16 ⊕ w13 = a5 73 0e 96	SubWord(x4)= 64 c1 53 1a = y5
w18 = w17 ⊕ w14 = f2 22 a3 90	Rcon(5)= 10 00 00 00
w19 = w18 ⊕ w15 = 43 8c dd 50	y5 ⊕ Rcon(5)= 74 c1 53 1a = z5
w20 = w16 ⊕ z5 = 58 9d 36 eb	RotWord(w23)= 40 46 bd 4c = x6
w21 = w20 ⊕ w17 = fd ee 38 7d	SubWord(x5)= 09 5a 7a 29 = y6
w22 = w21 ⊕ w18 = 0f cc 9b ed	Rcon(6)= 20 00 00 00
w23 = w22 ⊕ w19 = 4c 40 46 bd	y6 ⊕ Rcon(6)= 29 5a 7a 29 = z6
w24 = w20 ⊕ z6 = 71 c7 4c c2	RotWord(w27)= a5 a9 ef cf = x7
w25 = w24 ⊕ w21 = 8c 29 74 bf	SubWord(x6)= 06 d3 df 8a = y7
w26 = w25 ⊕ w22 = 83 e5 ef 52	Rcon(7)= 40 00 00 00
w27 = w26 ⊕ w23 = cf a5 a9 ef	y7 ⊕ Rcon(7)= 46 d3 df 8a = z7
w28 = w24 ⊕ z7 = 37 14 93 48	RotWord(w31)= 7d a1 4a f7 = x8
w29 = w28 ⊕ w25 = bb 3d e7 f7	SubWord(x7)= ff 32 d6 68 = y8
w30 = w29 ⊕ w26 = 38 d8 08 a5	Rcon(8)= 80 00 00 00
w31 = w30 ⊕ w27 = f7 7d a1 4a	y8 ⊕ Rcon(8)= 7f 32 d6 68 = z8
w32 = w28 ⊕ z8 = 48 26 45 20	RotWord(w35)= be 0b 38 3c = x9
w33 = w32 ⊕ w29 = f3 1b a2 d7	SubWord(x8)= ae 2b 07 eb = y9
w34 = w33 ⊕ w30 = cb c3 aa 72	Rcon(9)= 1B 00 00 00
w35 = w34 ⊕ w32 = 3c be 0b 38	y9 ⊕ Rcon(9)= b5 2b 07 eb = z9
w36 = w32 ⊕ z9 = fd 0d 42 cb	RotWord(w39)= 6b 41 56 f9 = x10
w37 = w36 ⊕ w33 = 0e 16 e0 1c	SubWord(x9)= 7f 83 b1 99 = y10
w38 = w37 ⊕ w34 = c5 d5 4a 6e	Rcon(10)= 36 00 00 00
w39 = w38 ⊕ w35 = f9 6b 41 56	y10 ⊕ Rcon(10)= 49 83 b1 99 = z10
w40 = w36 ⊕ z10 = b4 8e f3 52	
w41 = w40 ⊕ w37 = ba 98 13 4e	
w42 = w41 ⊕ w38 = 7f 4d 59 20	
w43 = w42 ⊕ w39 = 86 26 18 76	

AES Example … Contd.

Encryption

Start of round	After SubBytes	After ShiftRows	After MixColumns	Round Key
01 89 fe 76 23 ab dc 54 45 cd ba 32 67 ef 98 10				0f 47 0c af 15 d9 b7 7f 71 e8 ad 67 c9 59 d6 98
0e ce f2 d9 36 72 6b 2b 34 25 17 55 ae b6 4e 88	ab 8b 89 35 05 40 7f f1 18 3f f0 fc e4 4e 2f c4	ab 8b 89 35 40 7f f1 05 f0 fc 18 3f c4 e4 4e 2f	b9 94 57 75 e4 8e 16 51 47 20 9a 3f c5 d6 f5 3b	dc 9b 97 38 90 49 fe 81 37 df 72 15 b0 e9 3f a7
65 0f c0 4d 74 c7 e8 d0 70 ff e8 2a 75 3f ca 9c	4d 76 ba e3 92 c6 9b 70 51 16 9b e5 9d 75 74 de	4d 76 ba e3 c6 9b 70 92 9b e5 51 16 de 9d 75 74	8e 22 db 12 b2 f2 dc 92 df 80 f7 c1 2d c5 1e 52	d2 49 de e6 c9 80 7e ff 6b b4 c6 d3 b7 5e 61 c6
5c 6b 05 f4 7b 72 a2 6d b4 34 31 12 9a 9b 7f 94	4a 7f 6b bf 21 40 3a 3c 8d 18 c7 c9 b8 14 d2 22	4a 7f 6b bf 40 3a 3c 21 c7 c9 8d 18 22 b8 14 d2	b1 c1 0b cc ba f3 8b 07 f9 1f 6a c3 1d 19 24 5c	c0 89 57 b1 af 2f 51 ae df 6b ad 7e 39 67 06 c0
71 48 5c 7d 15 dc da a9 26 74 c7 bd 24 7e 22 9c	a3 52 4a ff 59 86 57 d3 f7 92 c6 7a 36 f3 93 de	a3 52 4a ff 86 57 d3 59 c6 7a f7 92 de 36 f3 93	d4 11 fe 0f 3b 44 06 73 cb ab 62 37 19 b7 07 ec	2c a5 f2 43 5c 73 22 8c 65 0e a3 dd f1 96 90 50
f8 b4 0c 4c 67 37 24 ff ae a5 c1 ea e8 21 97 bc	41 8d fe 29 85 9a 36 16 e4 06 78 87 9b fd 88 65	41 8d fe 29 9a 36 16 85 78 87 e4 06 65 9b fd 88	2a 47 c4 48 83 e8 18 ba 84 18 27 23 eb 10 0a f3	58 fd 0f 4c 9d ee cc 40 36 38 9b 46 eb 7d ed bd
72 ba cb 04 1e 06 d4 fa b2 20 bc 65 00 6d e7 4e	40 f4 1f f2 72 6f 48 2d 37 b7 65 4d 63 3c 94 2f	40 f4 1f f2 6f 48 2d 72 65 4d 37 b7 2f 63 3c 94	7b 05 42 4a 1e d0 20 40 94 83 18 52 94 c4 43 fb	71 8c 83 cf c7 29 e5 a5 4c 74 ef a9 c2 bf 52 ef
0a 89 c1 85 d9 f9 c5 e5 d8 f7 f7 fb 56 7b 11 14	67 a7 78 97 35 99 a6 d9 61 68 68 0f b1 21 82 fa	67 a7 78 97 99 a6 d9 35 68 0f 61 68 fa b1 21 82	ec 1a c0 80 0c 50 53 c7 3b d7 00 ef b7 22 72 e0	37 bb 38 f7 14 3d d8 7d 93 e7 08 a1 48 f7 a5 4a
db a1 f8 77 18 6d 8b ba a8 30 08 4e ff d5 d7 aa	b9 32 41 f5 ad 3c 3d f4 c2 04 30 2f 16 03 0e ac	b9 32 41 f5 3c 3d f4 ad 30 2f c2 04 ac 16 03 0e	b1 1a 44 17 3d 2f ec b6 0a 6b 2f 42 9f 68 f3 b1	48 f3 cb 3c 26 1b c3 be 45 a2 aa 0b 20 d7 72 38
f9 e9 8f 2b 1b 34 2f 08 4f c9 85 49 bf bf 81 89	99 1e 73 f1 af 18 15 30 84 dd 97 3b 08 08 0c a7	99 1e 73 f1 18 15 30 af 97 3b 84 dd a7 08 08 0c	31 30 3a c2 ac 71 8c c4 46 65 48 eb 6a 1c 31 62	fd 0e c5 f9 0d 16 d5 6b 42 e0 4a 41 cb 1c 6e 56
cc 3e ff 3b a1 67 59 af 04 85 02 aa a1 00 5f 34	4b b2 16 e2 32 85 cb 79 f2 97 77 ac 32 63 cf 18	4b b2 16 e2 85 cb 79 32 77 ac f2 97 18 32 63 cf	4b 86 8a 36 b1 cb 27 5a fb f2 f2 af cc 5a 5b cf	b4 8e f3 52 ba 98 13 4e 7f 4d 59 20 86 26 18 76
ff 08 69 64 0b 53 34 14 84 bf ab 8f 4a 7c 43 b9				

AES Example … Contd.

Avalanche

Round		Number of bits that differ
	0123456789abcdeffedcba9876543210 0023456789abcdeffedcba9876543210	1
0	0e3634aece7225b6f26b174ed92b5588 0f3634aece7225b6f26b174ed92b5588	1
1	657470750fc7ff3fc0e8e8ca4dd02a9c c4a9ad090fc7ff3fc0e8e8ca4dd02a9c	20
2	5c7bb49a6b72349b05a2317ff46d1294 fe2ae569f7ee8bb8c1f5a2bb37ef53d5	58
3	7115262448dc747e5cdac7227da9bd9c ec093dfb7c45343d689017507d485e62	59
4	f867aee8b437a5210c24c1974cffeabc 43efdb697244df808e8d9364ee0ae6f5	61
5	721eb200ba06206dcbd4bce704fa654e 7b28a5d5ed643287e006c099bb375302	68
6	0ad9d85689f9f77bc1c5f71185e5fb14 3bc2d8b6798d8ac4fe36a1d891ac181a	64
7	db18a8ffa16d30d5f88b08d777ba4eaa 9fb8b5452023c70280e5c4bb9e555a4b	67
8	f91b4fbfe934c9bf8f2f85812b084989 20264e1126b219aef7feb3f9b2d6de40	65
9	cca104a13e678500ff59025f3bafaa34 b56a0341b2290ba7dfdfbddcd8578205	61
10	ff0b844a0853bf7c6934ab4364148fb9 612b89398d0600cde116227ce72433f0	58

AES Decryption

- AES decryption is not identical to encryption since steps done in reverse
- but can define an equivalent inverse cipher with steps as for encryption
  - but using inverses of each step
  - with a different key schedule
- works since result is unchanged when
  - swap byte substitution & shift rows
  - swap mix columns & add (tweaked) round key

AES Decryption … Contd.

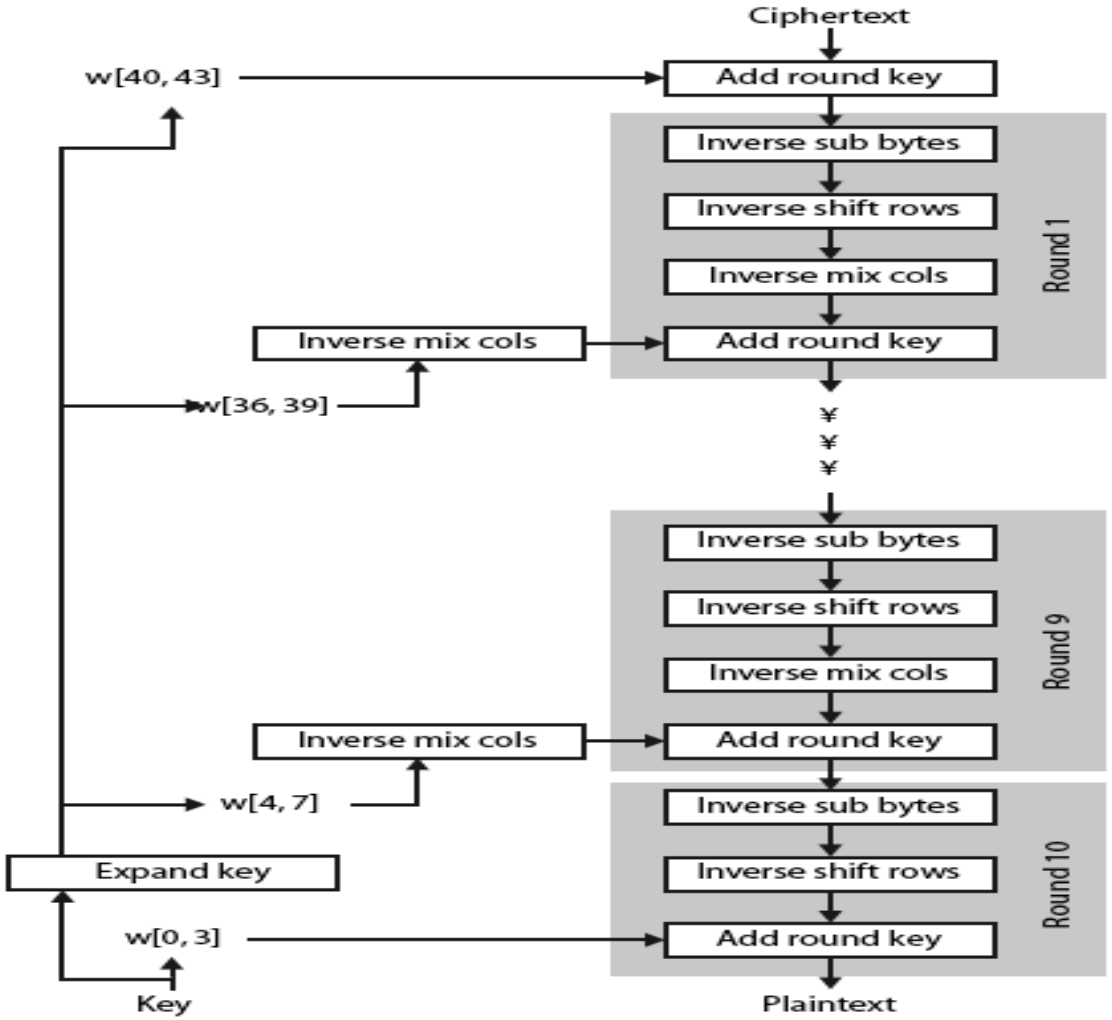

Implementation Aspects

- can efficiently implement on 8-bit CPU
  - byte substitution works on bytes using a table of 256 entries
  - shift rows is simple byte shift
  - add round key works on byte XOR's
  - mix columns requires matrix multiply in GF(2^8) which works on byte values, can be simplified to use table lookups & byte XOR's

Implementation Aspects … Contd.

- can efficiently implement on 32-bit CPU
  - redefine steps to use 32-bit words
  - can precompute 4 tables of 256-words
  - then each column in each round can be computed using 4 table lookups + 4 XORs
  - at a cost of 4Kb to store tables
- designers believe this very efficient implementation was a key factor in its selection as the AES cipher

Summary

Discussed about:

- Introduction
- Rijndael – the AES cipher
- AES encryption
- Steps in each round
- Key expansion
- AES decryption
- Implementation aspects